FLIGHT READINESS STATEMENT
STS-93/ET-99
EXTERNAL TANK PROJECT
PRE-FLIGHT REVIEW

EXTERNAL TANK ET-99/STS-93, AS IDENTIFIED IN THE EXTERNAL TANK PROJECT PRE-FLIGHT REVIEW DATED JUNE 18, 1999, IS CONSIDERED READY TO SUPPORT FLIGHT UPON ACCEPTABLE DISPOSITION OF OPEN/PLANNED WORK AND/OR OPEN ACTIONS.

for Joe E. Zimmerman
JACK BULLMAN/ED10

GABRIEL R. WALLACE/ED40

J. L. LUSK/MP31

James W. Dunn
For ~~PAUL~~ DANIEL C. **R. DUMBACHER/ED20**

Ann F. Whitaker
A. F. WHITAKER/ED30

M. D. Smiles
M. D. SMILES/CR70

M. D. Smiles
FOR **A. O. GOODSON/CR01**

Jack V. Counts
P. V. COUNTS/MP31, CHAIRMAN

June 18, 1999

Space Shuttle
External Tank

STS-93/ET-99
Pre-Flight Review

ACTIONS

1) JOE LUSK REVIEW SRB IMPLEMENTATION OF CORRECTIVE ACTIONS TO PRECLUDE EDAS OPERATION

2) GALE C / MIKE G CLARIFY BARE INTERTANK FACTOR OF SAFETY CHART # E21

3) DON B. CLARIFY MISSION LIFE ON ET-27

4) LEED - CLOSE LOOP WITH VENDOR ON TRANSDUCER ANOMALIES

OPEN WAIVER UPDATE TO HORIZONAL RIB VENTING

OPEN ACTION ON TRANSDUCER UA W/ DON MC MONGALE PVC / CHARLIE ABNER

99pfr.4250.ls.06/99

June 18, 1999

Space Shuttle
External Tank

STS-93/ET-99
Pre-Flight Review

ACTIONS

1) JOE LUSK REVIEW SRB IMPLEMENTATION OF CORRECTIVE ACTION TO PRECLUDE EDAS OPERATION

2) GALE C / MIKE G CLARIFY BARE INTERTANK FACTOR OF SAFETY CHANGE # 621

3) DOD B. CLARIFY MISSION LIFE ON ET-27

4) LOED → CLOSE LOOP WITH VENDOR ON TRANSDUCER ANOMALIES

UPDATE
OPEN WITNESS / TO HORIZONTAL RIB VENTING

OPEN ACTION OF TRANSDUCER UA W/ DON MCMONAGLE PVC / CHARLIE ABNER

99pfr.4250.ls.06/99

Agenda

• ***Overview***	***Jim Feeley***
• ***Prior Mission Performance Summary***	
• ***Current Mission/External Tank Highlights***	
• ET-99 Mass Properties Status	Rick Spring
• Changes	
- Instrumentation on Intertank Thrust Panel	Mark Mertz
- Intertank Thrust Panel Venting	Eugene Sweet
• Senior Management Review NCD	
- LO2 Tank Post Proof Crack (UAI)	Don Bolstad
• Special Topic: SSP Readiness Review Action Items	
- Re-evaluate Level Sensing Anomalies	Leed Colon
- Reaffirm Supplier Changes are Known/Assessed	Shy Parikh
• SRM&QA Assessment	Mike Bankester
• KSC Processing	Brian Knipfing
• Verification/Certification	Jim Feeley
• Mission Unique Assessment	
• Readiness Statement	
• Appendices	
- A: Minor Changes	
- B: SRM&QA Assessment	
- C: KSC Processing	
- D: Level II Waivers/Level III Deviations	

Overview

- This review for STS-93/ET-99 includes:
  - Items specific to mission STS-93
  - First time changes, differences and "out of family" non-conformances not previously flown and/or reviewed

- **FRR Series**

- ET/SRB Mate Review	11/30/1998
- Pre-flight Review	06/18/1999
- Space Shuttle Vehicle FRR	07/08/1999
- Mission Management Team (L-2 Day)	NET 07/18/1999

Prior Mission Performance Summary

STS-96/ET-100, 05/27/1999

System	Performance
OMRSD/LCC	No Violations
Instrumentation	• Data not available on six of sixteen Thrust Panel instruments due to SRB EDAS anomaly • All other ground/flight instrumentation performed nominally

Prior Mission Performance Summary

STS-96/ET-100, 05/27/1999

System	Performance
MPS	• Nominal
ET Hazardous Gas	• Nominal
ET disposal	• Nominal
TPS	• No issues during loading
Orbiter tile damage	• Lower surface, above average - Diameter > 1" = 66 - Total = 160
Post flight photo review	• SRB Cameras - Popcorning noted on Thrust Panels and adjacent Stringer Panels - Video review shows venting improves foam performance • Images from hand held 35mm - Light spots visible on thrust panel and forward ogive area - Areas cannot be confirmed as divots due to subject distance and resolution • Images from umbilical well cameras - LH2 Umbilical (16mm) ET illumination insufficient to support detailed review - LO2 Umbilical (35mm) review confirmed popcorning on +Y Thrust Panel and adjacent Stringer Panels

Mission/External Tank Highlights

STS-93/ET-99, 07/22/1999

Mission	**STS-93**
• Launch	NET 07/20/1999
- Window	00:36 (43 minutes)
- Pad	B
- Orbiter	Columbia (OV-102)
- Orbital inclination	28.4° - Insertion at 153 NM
- ET photo coverage	• Umbilical well cameras • SRB cameras
• Primary payload	CHANDRA X-Ray Observatory
• Landing	07/27/1999
- Time	00:35 EDT
- Location	KSC

External Tank	**ET-99**
• DD250 acceptance	07/27/1998
• Shipped to launch site	08/07/1998

99pfr.4250.ls.06/99

Agenda

• Overview	Jim Feeley
• Prior Mission Performance Summary	
• Current Mission/External Tank Highlights	
• ***ET-99 Mass Properties Status***	***Rick Spring***
• Changes	
- Instrumentation on Intertank Thrust Panel	Mark Mertz
- Intertank Thrust Panel Venting	Eugene Sweet
• Senior Management Review NCD	
- LO2 Tank Post Proof Crack (UAI)	Don Bolstad
• Special Topic: SSP Readiness Review Action Items	
- Re-evaluate Level Sensing Anomalies	Leed Colon
- Reaffirm Supplier Changes are Known/Assessed	Shy Parikh
• SRM&QA Assessment	Mike Bankester
• KSC Processing	Brian Knipfing
• Verification/Certification	Jim Feeley
• Mission Unique Assessment	
• Readiness Statement	
• Appendices	
- A: Minor Changes	
- B: SRM&QA Assessment	
- C: KSC Processing	
- D: Level II Waivers/Level III Deviations	

ET-99 Mass Properties Status

Subject:

- ET-99 Weight Status

Status:

- The specification weight for ET-99 is 58,470 lbs
- The nominal control weight for SLWT is 58,505±511 lbs
  - ET-99 was weighed 9/1/98 @ KSC
    - Predicted 58,336 lbs
    - As-weighed 58,379 lbs
    - Delta + 43 lbs
- ET-99 was weighed with tension load cell system

Agenda

• Overview	Jim Feeley
• Prior Mission Performance Summary	
• Current Mission/External Tank Highlights	
• ET-99 Mass Properties Status	Rick Spring
• ***Changes***	
- ***Instrumentation on Intertank Thrust Panel***	***Mark Mertz***
- Intertank Thrust Panel Venting	Eugene Sweet
• Senior Management Review NCD	
- LO2 Tank Post Proof Crack (UAI)	Don Bolstad
• Special Topic: SSP Readiness Review Action Items	
- Re-evaluate Level Sensing Anomalies	Leed Colon
- Reaffirm Supplier Changes are Known/Assessed	Shy Parikh
• SRM&QA Assessment	Mike Bankester
• KSC Processing	Brian Knipfing
• Verification/Certification	Jim Feeley
• Mission Unique Assessment	
• Readiness Statement	
• Appendices	
- A: Minor Changes	
- B: SRM&QA Assessment	
- C: KSC Processing	
- D: Level II Waivers/Level III Deviations	

Installation of Thrust Panel Instrumentation

FEC KET-0042

Change:

- Installed flight instrumentation on the ET Intertank -Y & +Y Thrust Panels (FEC-KET-0042)

Requirement:

- Obtain data necessary to characterize the response of the ET Intertank Thrust Panel in its flight environment to support Intertank TPS IFA root cause assessment

Background:

- Instrumentation on ET-99 is part of a planned incremental data acquisition to support the closure of the ET Intertank Thrust Panel Foam Loss fault tree
  - Data needed to characterize performance includes vibration levels, loads, and heating rates
  - Available channels on SRB Enhanced Data Acquisition Systems (EDAS) limits amount of data gathered for each flight
- Data retrieved from STS-95/ET-98 and STS-96/ET-100 Thrust Panel Instrumentation
  - Preliminary evaluation of data indicates that values are consistent between flights
  - Evaluation and correlation of data continues

Installation of Thrust Panel Instrumentation

FEC KET-0042

Description:

- STS-93/ET-99 instrumentation will provide substrate strain and thermal environments as well as ascent vibration
  - Six instruments mounted on the internal face of the Intertank -Y Thrust Panel
    - Two accelerometers, one temperature sensor, two uniaxial strain gages, and one rosette strain gage (uses three data channels)
    - Circuits routed to the Right & Left SRB EDAS via modified ET/SRB Cross-Strap cables
  - Four instruments mounted on the internal face of the Intertank +Y Thrust Panel
    - Two accelerometers, one temperature sensor, and one uniaxial strain gage
    - Circuits routed to the Right SRB EDAS via modified ET/SRB Cross-Strap cables
- Instrument installation and connection to EDAS same as that on STS-95/ET-98
- Weight impact ≈ +15 lbs

Installation of Thrust Panel Instrumentation

FEC KET-0042

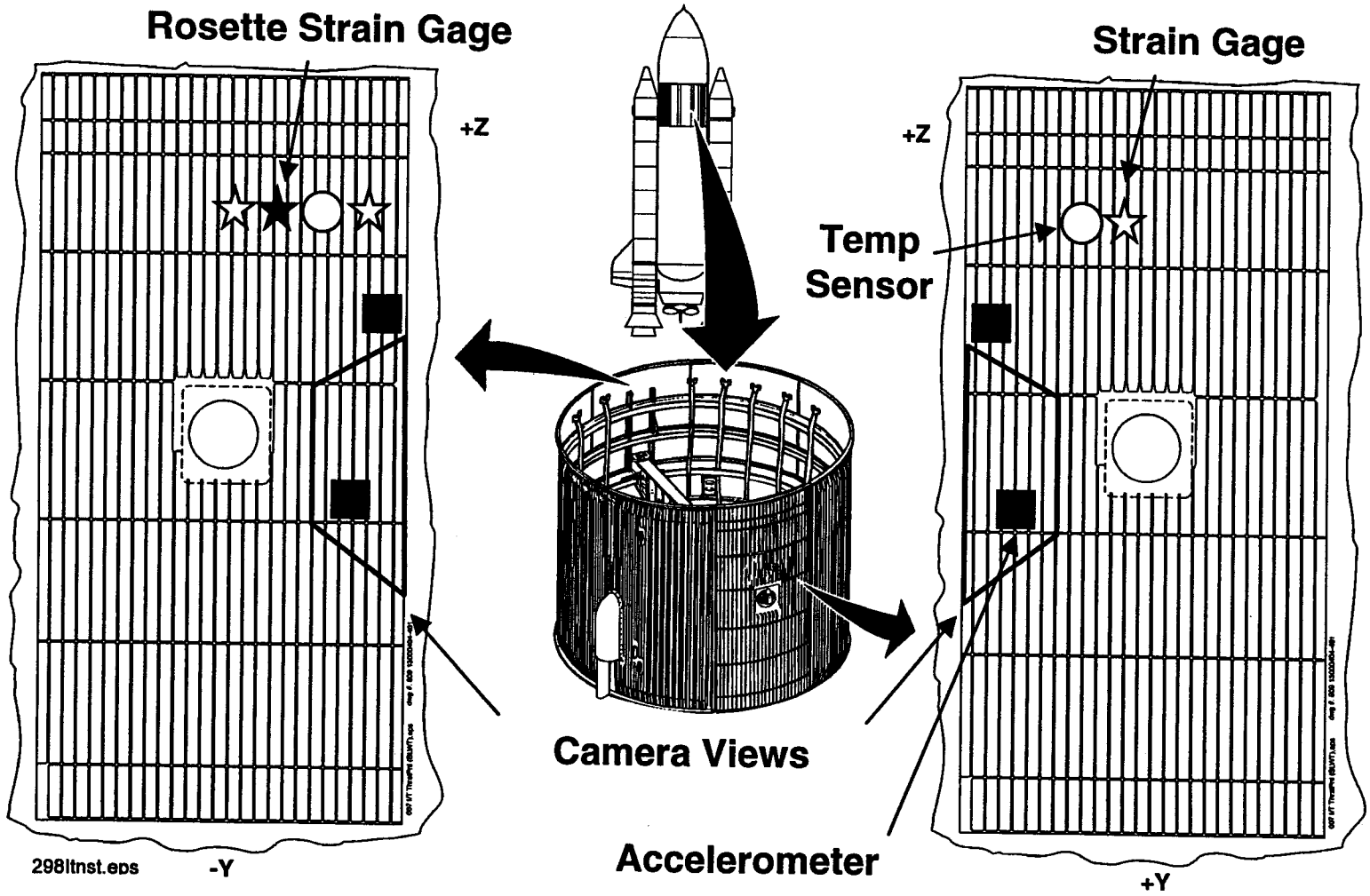

Installation of Thrust Panel Instrumentation

FEC KET-0042

Basis for Certification:

- Analysis
  - Methodology: Static stress analysis
  - Requirements/Results:
    - No impact to structural factors of safety
- Similarity
  - Accelerometers and cabling flew successfully on STS-95/ET-98 -Y Intertank Thrust Panel and on STS-96/ET-100
    - Adhesive bond tests performed to verify instrumentation and cabling installation
  - Temperature sensors flown successfully on SRB and on STS-96/ET-100 Thrust Panel
- Inspection
  - Instrumentation calibrated by vendor
  - Installation performed per approved STPs
    - STP 6001 - Accelerometers
    - STP 6515 - Strain gages and temperature sensor
    - STP 6520 - Cabling and wires

99pfr.4250.ls.06/99

Agenda

• Overview	Jim Feeley
• Prior Mission Performance Summary	
• Current Mission/External Tank Highlights	
• ET-99 Mass Properties Status	Rick Spring
• Changes	
- Instrumentation on Intertank Thrust Panel	Mark Mertz
- ***Intertank Thrust Panel Venting***	***Eugene Sweet***
• Senior Management Review NCD	
- LO2 Tank Post Proof Crack (UAI)	Don Bolstad
• Special Topic: SSP Readiness Review Action Items	
- Re-evaluate Level Sensing Anomalies	Leed Colon
- Reaffirm Supplier Changes are Known/Assessed	Shy Parikh
• SRM&QA Assessment	Mike Bankester
• KSC Processing	Brian Knipfing
• Verification/Certification	Jim Feeley
• Mission Unique Assessment	
• Readiness Statement	
• Appendices	
- A: Minor Changes	
- B: SRM&QA Assessment	
- C: KSC Processing	
- D: Level II Waivers/Level III Deviations	

Intertank Thrust Panel Venting

FEC KET-0051/KET-0052

Change:

- Vent foam in additional areas on the Intertank Thrust Panel

Background:

- STS-96/ET-100 SRB camera video showed reduced foam loss from popcorning/divoting in vented areas of thrust panel

	-Y	+Y
Total Divots	126	233
Vented	23	37
Unvented	103	196

- Video also showed popcorning/divoting of NCFI 24-124 in circumferential rib (non-vented area)
  - Material loss principally seen on longitudinal ribs
  - Very little foam loss noted in ramp areas where NCFI 24-124 was sprayed over SS-1171 wedges

Intertank Thrust Panel Venting

FEC KET-0051/KET-0052

Vented Area on STS-96/ET-100 +Y Thrust Panel

Foam Loss From Longitudinal Ribs Adjacent to Circumferential Rib

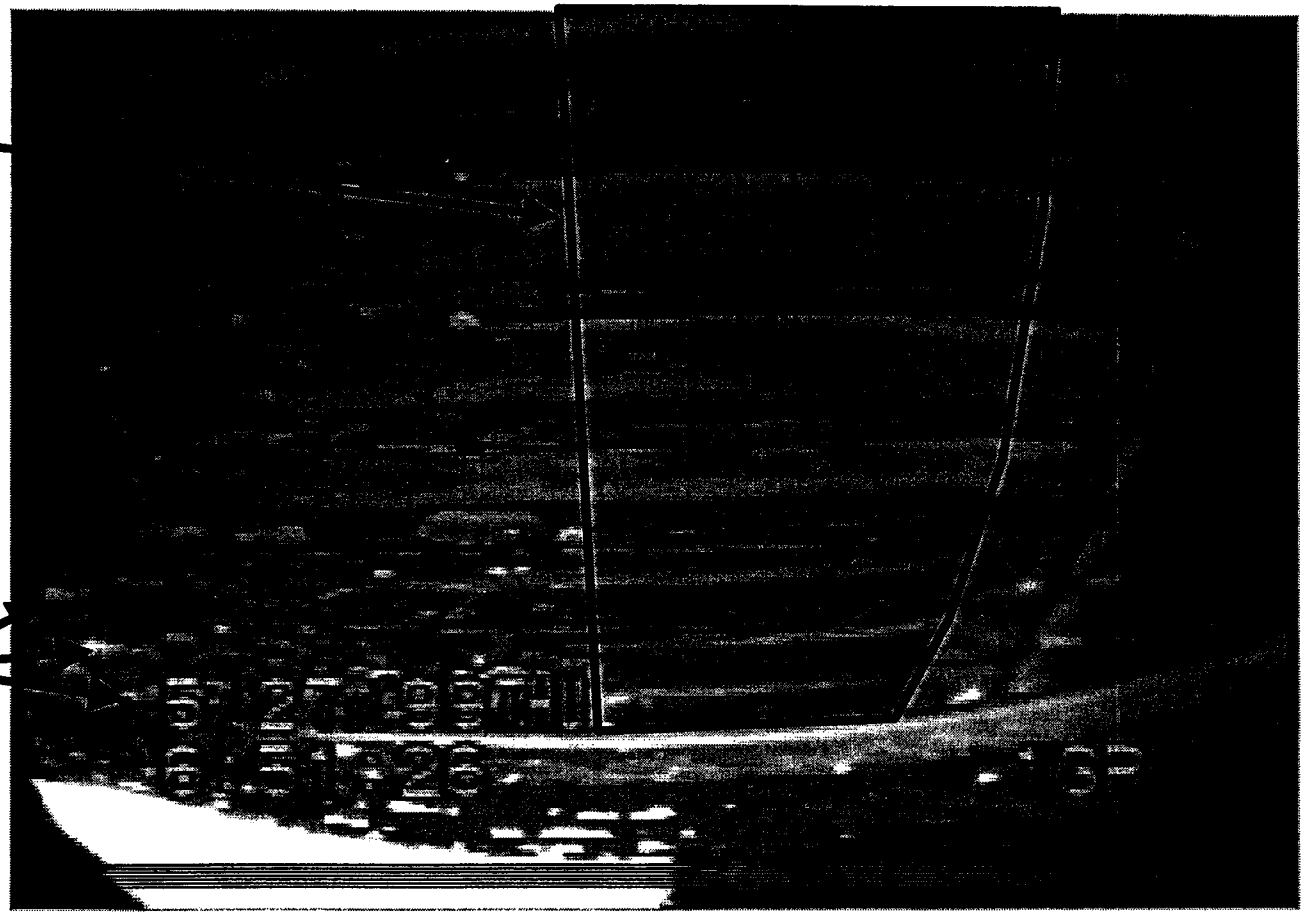

Intertank Thrust Panel Venting

FEC KET-0051/KET-0052

Discussion:

- Venting of valleys and longitudinal ribs in areas removed from circumferential ribs previously certified to "do no harm"
- Venting of longitudinal ribs adjacent to circumferential ribs is now appropriate
  - Vented areas on STS-96/ET-100 performed as expected
  - Foam loss in areas of proposed additional venting occurred on STS-96/ET-100
  - Conservative analysis of bounding case (assuming all foam lost in the proposed areas) shows that structure would remain fail-safe
  - SRB camera view could be used for future full-flight certification
- Venting on and adjacent to circumferential ribs was excluded from certification testing
  - No "earth-bound" test bed/techniques currently exist to perform certification of vented foam on or around the thrust panel circumferential ribs
    - Boundary layer effects in Hot Gas Facility
    - Non-representative aero-shear in Thermal/Vacuum Facility
- Venting demonstration on STS-96/ET-100 flight and on all panels provided improvement in foam performance. No harm certification performed for very similar configuration
  - Adjacent material (non-vented) is NCFI 24-124 over SS-1171 versus NCFI 24-124 over metal
  - No configuration difference in actual vented area

99pkt050.ls.06/99

Intertank Thrust Panel Venting

FEC KET-0051/KET-0052

STS-93/ET-99 Implementation Approach:

- MAF representatives trained KSC/USA technicians previously certified for venting on technique to use with longitudinal/circumferential rib geometry
- KSC/USA technicians vented additional areas on Intertank Thrust Panels
  - -Y vent pattern was used to accomplish additional +Y venting effort at valley, sidewall, and rib top locations
    - Areas certified but not previously vented
  - Longitudinal ribs adjacent to circumferential ribs
    - Length of each additional vented zone is approximately one foot
    - Not considered as safety of flight concern
      - Additional venting on ET Intertank ribs has not been certified
      - Revision to waiver 675 (NSTS 07700, Volume X paragraph 3.2.1.2.14 - Debris prevention) is in process

Intertank Thrust Panel Venting

FEC KET-0051/KET-0052

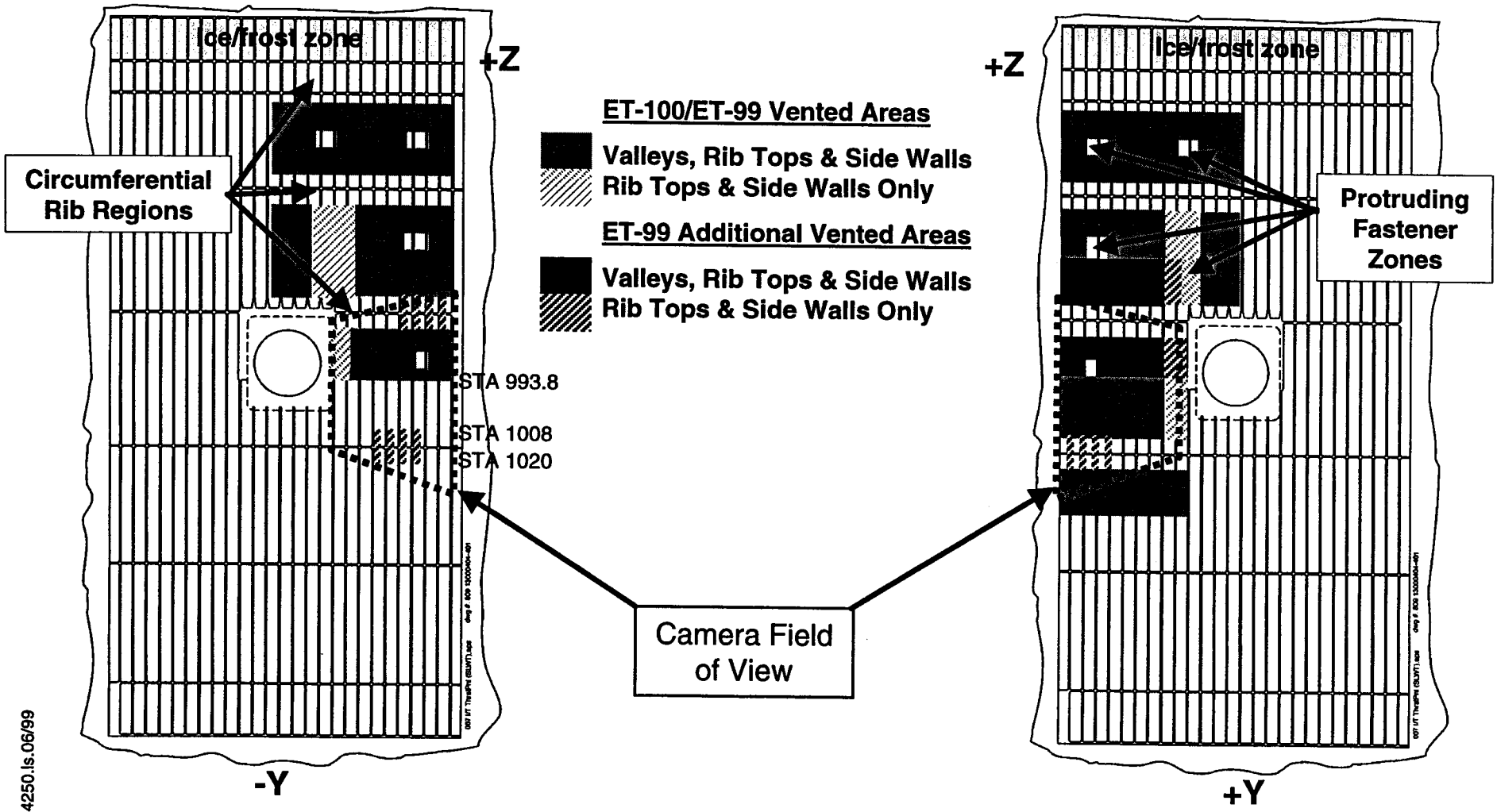

Intertank Thrust Panel Venting

FEC KET-0051/KET-0052

Rationale for Acceptance

- Maximum design temperature = 190 °F at T=120.0 sec
- Structural assessment performed on "bare" Thrust Panel configuration
- Thrust panel structure maintains "fail safe" condition
  - FS >= 1.40, overall stability

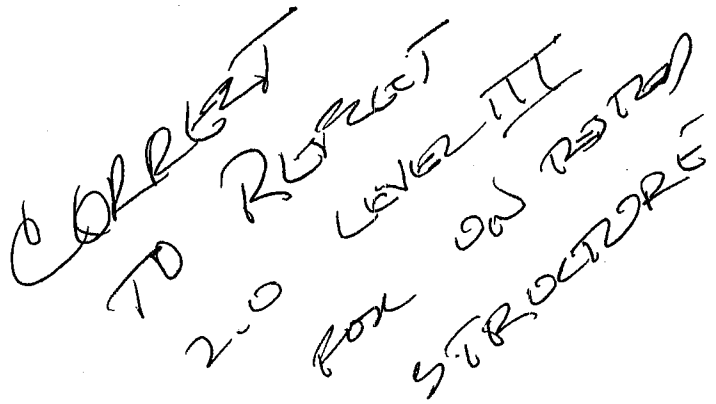

Agenda

• Overview	Jim Feeley
• Prior Mission Performance Summary	
• Current Mission/External Tank Highlights	
• ET-99 Mass Properties Status	Rick Spring
• Changes	
- Instrumentation on Intertank Thrust Panel	Mark Mertz
- Intertank Thrust Panel Venting	Eugene Sweet
• ***Senior Management Review NCD***	
- ***LO2 Tank Post Proof Crack (UAI)***	***Don Bolstad***
• Special Topic: SSP Readiness Review Action Items	
- Re-evaluate Level Sensing Anomalies	Leed Colon
- Reaffirm Supplier Changes are Known/Assessed	Shy Parikh
• SRM&QA Assessment	Mike Bankester
• KSC Processing	Brian Knipfing
• Verification/Certification	Jim Feeley
• Mission Unique Assessment	
• Readiness Statement	
• Appendices	
- A: Minor Changes	
- B: SRM&QA Assessment	
- C: KSC Processing	
- D: Level II Waivers/Level III Deviations	

LO2 Tank Post Proof Crack (UAI)

SMR-98-002A

Issue:

- Crack found in the OFO-2 weld at intersection with the O2 weld after first proof test

Background:

- T-Intersection crack was found after first proof test and dispositioned by the LMMSS and MSFC Fracture Control Boards to allow a second proof test
  - Flaw length reported 0.090" after first proof and 0.130" after second proof
  - Intersection crack is located on cover-pass side just under the cover pass
- Crack is typical of intersection cracks which have been previously dissected and metallurgically evaluated
- The weld bead was locally shaved
- The crack is not visible to penetrant

LO2 Tank Post Proof Crack (UAI)

SMR-98-002A

OFO-2 Weld Crack Location ET-99

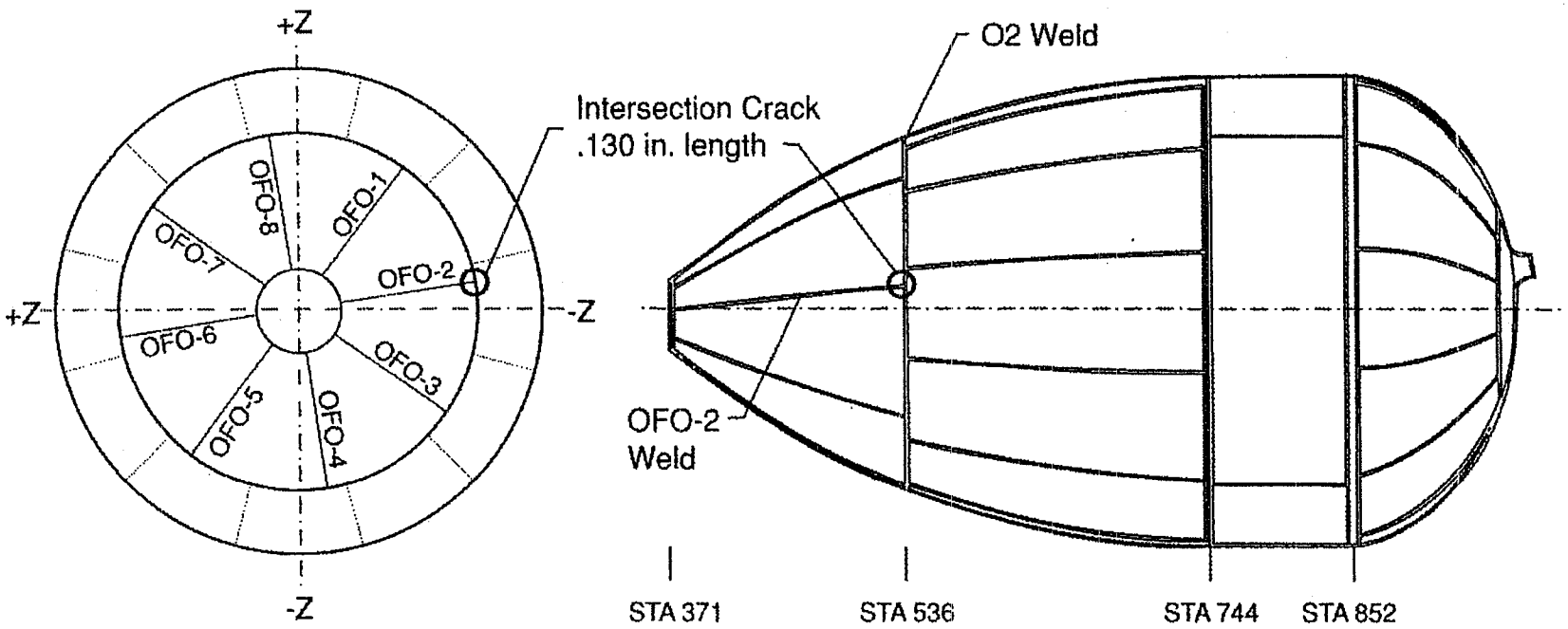

215-41 OFO2 weld.eps

99pfr.4250.ls.06/99

LO2 Tank Post Proof Crack (UAI)

SMR-98-002A

Background (continued):

- Repair of the OFO-2 intersection would have involved significant risks
  - Repair weld strength of 30 ksi vs. 40 ksi for initial weld
  - Repair weld toughness lower than initial toughness
  - Difficult OSL repair
  - Potential for oil can in ogive membrane

- Use-as-is recommendation was concurred to by the MSFC FCB (1/20/98) and presented to Mr. T. Holloway (2/6/98)

LO2 Tank Post Proof Crack (UAI)

SMR-98-002A

Rationale for Acceptance:

- Very conservative life analysis, supported by testing, shows very high mission life (~~22,651~~ missions) before leak or burst

  1600 MISSIONS LIFE

- Proof test is much more critical than flight and has been successfully performed twice
  - Proof test demonstrated factor = 1.76

- Reported flaw is in family with intersection crack behavior documented by metallurgical analyses and measured in intersection panel testing

- Change in flaw length reported after the second proof test is in family with intersection panel testing

Agenda

• Overview	Jim Feeley
• Prior Mission Performance Summary	
• Current Mission/External Tank Highlights	
• ET-99 Mass Properties Status	Rick Spring
• Changes	
- Instrumentation on Intertank Thrust Panel	Mark Mertz
- Intertank Thrust Panel Venting	Eugene Sweet
• Senior Management Review NCD	
- LO2 Tank Post Proof Crack (UAI)	Don Bolstad
• ***Special Topic: SSP Readiness Review Action Items***	
- ***Re-evaluate Level Sensing Anomalies***	***Leed Colon***
- Reaffirm Supplier Changes are Known/Assessed	Shy Parikh
• SRM&QA Assessment	Mike Bankester
• KSC Processing	Brian Knipfing
• Verification/Certification	Jim Feeley
• Mission Unique Assessment	
• Readiness Statement	
• Appendices	
- A: Minor Changes	
- B: SRM&QA Assessment	
- C: KSC Processing	
- D: Level II Waivers/Level III Deviations	

SSP Readiness Review Action Items

93-ORMR-002: Re-evaluate Level Sensing Anomalies

Issue:

- Two unexplained liquid measurement anomalies were reported during STS-90/ET-91 (OV-102) flight
  - ET LO2 100% Liquid Level # 2 flashed between wet and dry
  - ET LH2 98% Liquid Level # 2 failed wet
- STS-93/ET-99 is next mission using OV-102

Background:

- ET LO2 100% Liquid Level # 2 Flashed Between Wet and Dry
  - Flashed wet/dry 10 times over a 15 second time frame at approximately T+300 seconds during ascent and indicated dry at all other time during ascent
  - Closed as UA with most probable cause intermittent short or open circuit in sensor or sensor data path
- ET LH2 98% Liquid Level # 2 Failed Wet
  - Indicated failed wet at T+65.6 seconds during ascent
  - Closed as UA with the most probable cause an open or short in sensor

SSP Readiness Review Action Items

93-ORMR-002: Re-evaluate Level Sensing Anomalies

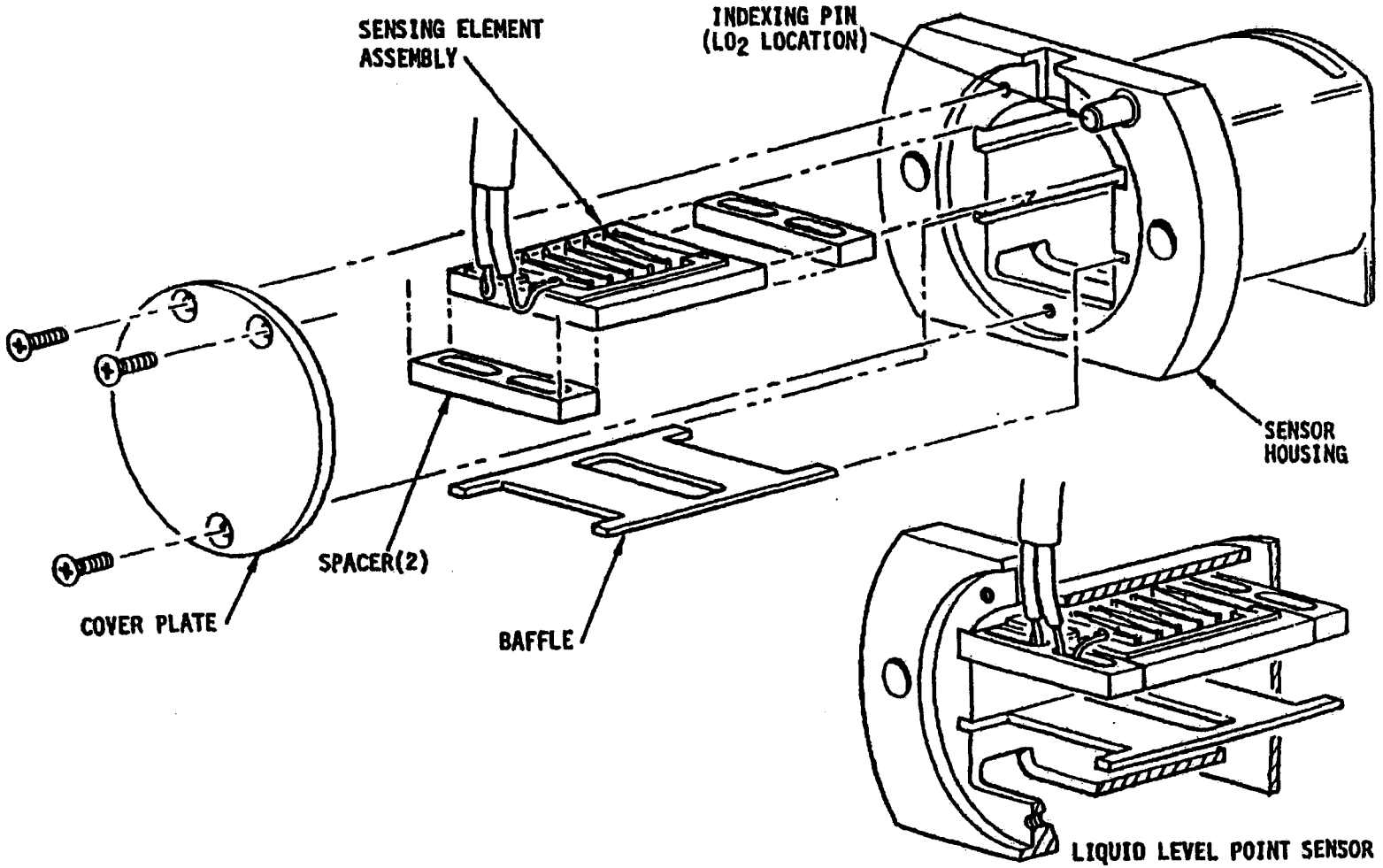

SSP Readiness Review Action Items

93-ORMR-002: Re-evaluate Level Sensing Anomalies

Discussion:

- Most probable cause - intermittent short or open circuit in sensor or sensor data path
  - "Wet" output signal by design for most probable failure modes
    - Normal Ops (heat transfer control sensor voltage)
    - Excitation Short To Ground
    - Open Circuit
- Sensor utilizes a 0.0005" platinum wire sensing element mounted on a ceramic frame
- Sensor was re-designed in 1982 to eliminate failures detected on ET-1 and ET-2
  - Since these two failures occurred (STS-90), 80 sensors have been flown without an anomaly (4 flights)
  - Since Return to Flight, 1380 sensors have flown (69 flights) and only five failures occurred
- Continuity and isolation checks done at MAF on loading sensors, depletion sensors and harnesses
  - Continuity and isolation tests repeated at KSC for depletion sensors
  - Point sensor electronics box checkouts performed three times after ET/ORB Mate

SSP Readiness Review Action Items

93-ORMR-002: Re-evaluate Level Sensing Anomalies

Discussion (continued):

- Harness wiring analysis
  - Both sensor circuits are routed in the ET LH2 cable tray (305W1 harness)
  - Both sensor circuits are routed through connector 50J23 in the ET/ORB interface
    - Orbiter wiring, monoball wiring and connectors were inspected post flight with no anomalies
    - ET sensor simulator was mated and auto checkout performed with no anomalies

SSP Readiness Review Action Items

93-ORMR-002: Re-evaluate Level Sensing Anomalies

Discussion (continued):

- ET Loading vs LH2 Depletion Sensors and Redundancy
  - Loading and depletion sensors are of the same design but perform different functions
    - Loading sensors required for loading only (8/tank)
      - Ground use only
    - Depletion sensors (4) are backup to primary flight software mass calculation for engine cutoff
      - Sensors shock isolated for enhanced reliability
      - Point level sensor electronics box has internal redundancy for power and signal conditioning
      - Sensor data sent to separate MDMs

- After detailed re-evaluations of these UAs, the technical community (KSC, MSFC, Downey, JSC, MAF) agree the UA troubleshooting and UA rational for flight are adequate

Agenda

• Overview	Jim Feeley
• Prior Mission Performance Summary	
• Current Mission/External Tank Highlights	
• ET-99 Mass Properties Status	Rick Spring
• Changes	
- Instrumentation on Intertank Thrust Panel	Mark Mertz
- Intertank Thrust Panel Venting	Eugene Sweet
• Senior Management Review NCD	
- LO2 Tank Post Proof Crack (UAI)	Don Bolstad
• Special Topic: SSP Readiness Review Action Items	
- Re-evaluate Level Sensing Anomalies	Leed Colon
- ***Reaffirm Supplier Changes are Known/Assessed***	***Shy Parikh***
• SRM&QA Assessment	Mike Bankester
• KSC Processing	Brian Knipfing
• Verification/Certification	Jim Feeley
• Mission Unique Assessment	
• Readiness Statement	
• Appendices	
- A: Minor Changes	
- B: SRM&QA Assessment	
- C: KSC Processing	
- D: Level II Waivers/Level III Deviations	

SSP Readiness Review Action Items

96-FRR-002: Reaffirm Supplier Changes are Known/Assessed

Issue:

- Reaffirm that suppliers' processes or material changes are known and assessed by the program

Background:

- Action was verbalized for all projects at the STS-96/ ET-100 Flight Readiness Review
  - Official notice of the action has not yet been issued
- Topic of supplier changes has been discussed recently at MAF
  - 6th Buy
  - Supplier Conference
  - Extensive review of ET-100
- Response to the anticipated action has been prepared by Product Assurance

SSP Readiness Review Action Items

96-FRR-002: Reaffirm Supplier Changes are Known/Assessed

Discussion:

- Set of controls are currently in place for 5th Buy which includes ETs 61-121
  - ETM 64-119 requires that suppliers notify LMMSS of any proposed changes in design, materials, fabrication methods, or processes by the supplier or their subtier
  - FRR action response outlines specific quality controls and process followed when an anomaly is discovered
- Additional controls in place for 6th Buy
  - Lessons Learned are provided to each new supplier immediately subsequent to award
  - All suppliers required to notify MAF of any in-house or subtier process change
    - Equipment relocation/refurbishment and changes in tooling, critical process constituents, or personnel

SSP Readiness Review Action Items

96-FRR-002: Reaffirm Supplier Changes are Known/Assessed

Discussion (continued):

- Additional controls in place for 6th Buy (continued)
  - All suppliers required to submit process flow charts, initial and revised, detailing production processes for approval prior to start of manufacture
  - All suppliers receive a video of LMMSS's "No Change" policy and potential impacts to Mission Success
  - Monthly videoconferences held with PQC and Materiel field personnel to provide training and discuss Lessons Learned
- Future Control Enhancements
  - Currently developing SPC analysis of formulated materials as an early warning detection method of possible changes
    - Upon implementation, variances in composition of formulated materials will be detected and evaluated prior to issuance of material to production

SSP Readiness Review Action Items

96-FRR-002: Reaffirm Supplier Changes are Known/Assessed

Summary:

- Numerous command media controlled processes are in place to ensure suppliers meet engineering drawing requirements
  - Emphasis is placed on critical supplier processes such as heat treat, welding, NDE and precision cleaning
- For discovered anomalies, well established procedures are in place to ensure Mission Success and positive corrective action

Agenda

• Overview	Jim Feeley
• Prior Mission Performance Summary	
• Current Mission/External Tank Highlights	
• ET-99 Mass Properties Status	Rick Spring
• Changes	
- Instrumentation on Intertank Thrust Panel	Mark Mertz
- Intertank Thrust Panel Venting	Eugene Sweet
• Senior Management Review NCD	
- LO2 Tank Post Proof Crack (UAI)	Don Bolstad
• Special Topics	
- SSP Readiness Review Action Items	
• ***SRM&QA Assessment***	***Mike Bankester***
• KSC Processing	Brian Knipfing
• Verification/Certification	Jim Feeley
• Mission Unique Assessment	
• Readiness Statement	
• Appendices	
- A: Minor Changes	
- B: SRM&QA Assessment	
- C: KSC Processing	
- D: Level II Waivers/Level III Deviations	

SRM&QA Assessment

as of 06/16/1999

Item	Status
• ALERTS	None Open
• MRB Assessment	Complete - No issues/no impact to hazard controls
• Hazard Assessment	Complete - All hazard reports were re-assessed and hazard controls verified
• Corrective Action Problem Summaries (CAPS) - T-067PF, Loss of Intertank SOFI during Ascent of STS-87/ ET-89 (Documents IFA)	Closed pending action

Agenda

• Overview	Jim Feeley
• Prior Mission Performance Summary	
• Current Mission/External Tank Highlights	
• ET-99 Mass Properties Status	Rick Spring
• Changes	
- Instrumentation on Intertank Thrust Panel	Mark Mertz
- Intertank Thrust Panel Venting	Eugene Sweet
• Senior Management Review NCD	
- LO2 Tank Post Proof Crack (UAI)	Don Bolstad
• Special Topics	
- SSP Readiness Review Action Items	
• SRM&QA Assessment	Mike Bankester
• ***KSC Processing***	***Brian Knipfing***
• Verification/Certification	Jim Feeley
• Mission Unique Assessment	
• Readiness Statement	
• Appendices	
- A: Minor Changes	
- B: SRM&QA Assessment	
- C: KSC Processing	
- D: Level II Waivers/Level III Deviations	

KSC Processing - Status

as of 06/17/1999

- Discrepancy Reports (DRs)/Problem Reports (PRs) Review
  - All PR/MRB discrepancies/dispositions similar to previously flown vehicles
  - All MRBs have been reviewed by MAF Reliability for potential SMR

- Limited Life Component/ET Status
  - All within required life through scheduled launch date plus 90 days

- OMRSD Exceptions/Waivers:
  - WK03850R1 LO2/LH2 tank pressure monitor for move
    - OMRSD T00ENV.110 waived because tank pressure could not be recorded within one day of move from VAB to MLP park site and prior to return to VAB
    - Pressure monitoring gage panel was removed from GSE access door prior to move from VAB and flight door installed to prevent possible rain intrusion

KSC Processing - Status

as of 06/17/1999

- Changes
  - ET modifications
    - Mod Kits — 1
      - E153, Delete RSS coaxial connector from GUCP S/N 008
    - DC&R — 0
    - Bldg 45 — 3
      - Weigh ET using Orbiter scale system
      - Record temp/press during weighing
      - Nose cone fastener replace
    - FEC — 7
      - Instrument Intertank thrust panel
      - Grid on Intertank thrust panel
      - Reinforce guide rail rub strip
      - Thrust panel foam reduction
      - Thrust panel foam venting (3 FECs)
  - OMRSD/LCC — 0
  - Software — 0
- SIM Load (S0044) — 06/21/99
- SIM Launch (S0056) — 06/15/99

Agenda

- Overview — Jim Feeley
- Prior Mission Performance Summary
- Current Mission/External Tank Highlights
- ET-99 Mass Properties Status — Rick Spring
- Changes
  - Instrumentation on Intertank Thrust Panel — Mark Mertz
  - Intertank Thrust Panel Venting — Eugene Sweet
- Senior Management Review NCD
  - LO2 Tank Post Proof Crack (UAI) — Don Bolstad
- Special Topics
  - SSP Readiness Review Action Items
- SRM&QA Assessment — Mike Bankester
- KSC Processing — Brian Knipfing
- ***Verification/Certification***
- ***Mission Unique Assessment*** — ***Jim Feeley***
- ***Readiness Statement***
- Appendices
  - A: Minor Changes
  - B: SRM&QA Assessment
  - C: KSC Processing
  - D: Level II Waivers/Level III Deviations

99pt.i250.ls.06/99

Verification/Certification

as of 06/16/1999

Item	Status
• NSTS 07700, Volume X Baseline - Revision L, Change 249	No Issues
• Certification documentation	
- Hardware Certification Sheets (HCS)	Complete - No Issues
- Certificates of Qualification (COQ)	Complete - No Issues
• Waivers/Deviations	
- Revision to waiver 675 (NSTS 07700, Volume X paragraph 3.2.1.2.14 - Debris prevention) is in process to accept additional Intertank thrust panel TPS venting	In process

99pfr.4250.ls.06/99

Agenda

• Overview	Jim Feeley
• Prior Mission Performance Summary	
• Current Mission/External Tank Highlights	
• ET-99 Mass Properties Status	Rick Spring
• Changes	
- Instrumentation on Intertank Thrust Panel	Mark Mertz
- Intertank Thrust Panel Venting	Eugene Sweet
• Senior Management Review NCD	
- LO2 Tank Post Proof Crack (UAI)	Don Bolstad
• Special Topics	
- SSP Readiness Review Action Items	
• SRM&QA Assessment	Mike Bankester
• KSC Processing	Brian Knipfing
• ***Verification/Certification***	***Jim Feeley***
• ***Mission Unique Assessment***	
• ***Readiness Statement***	
• Appendices	
- A: Minor Changes	
- B: SRM&QA Assessment	
- C: KSC Processing	
- D: *Level II Waivers/Level III Deviations*	

99pt.4250.ls.06/99

Verification/Certification

as of 06/16/1999

Item	Status
• NSTS 07700, Volume X Baseline - Revision L, Change 249	No Issues
• Certification documentation - Hardware Certification Sheets (HCS)	Complete - No Issues
- Certificates of Qualification (COQ)	Complete - No Issues
• Waivers/Deviations - Revision to waiver 675 (NSTS 07700, Volume X paragraph 3.2.1.2.14 - Debris prevention) is in process to accept additional Intertank thrust panel TPS venting	In process

99pfr.4250.ls.06/99

Verification/Certification

as of 06/16/1999

Item	Status
• NSTS 07700, Volume X Baseline - Revision L, Change 249	No Issues
• Certification documentation	
- Hardware Certification Sheets (HCS)	Complete - No Issues
- Certificates of Qualification (COQ)	Complete - No Issues
• Waivers/Deviations	
- Revision to waiver 675 (NSTS 07700, Volume X paragraph 3.2.1.2.14 - Debris prevention) is in process to accept additional Intertank thrust panel TPS venting	In process

99pfr.4250.ls.06/99

Mission Unique Assessment

as of 06/16/1999

Category/Item	STS-93
• Review of MRB actions using updated loads	ECD 07/10/1999
• MPS Preflight Prediction Package	ECD 07/10/1999

Readiness Statement

The External Tank, ET-99, is hereby certified and ready for STS-93 flight pending completion/closure of open and planned work

---

Terry L. Hibbard
Vice President, External Tank Project
Lockheed Martin Michoud Space Systems

99pfr.4250.ls.06/99

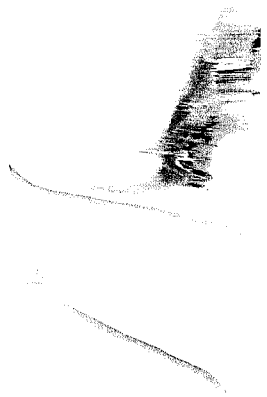

Appendices

- A: Minor Changes

- B: SRM&QA Assessment
  - NCD Assessment Criteria

- C: KSC Processing
  - PR/MRB Summaries
  - Modification Summaries/Status
  - Limited Life Component Status
  - Alternate Blowing Agent Usage at KSC
  - Facility Modifications
  - Software Changes: None
  - OMRSD Exceptions/Waivers: Previously discussed
  - OMRSD Changes (RCNs): None

- D: Level II Waivers/Level III Deviations

Minor Changes

J31195/J31195A - Propellant Tank Reallocations

Summary of SLWT Tank Allocations

			ET As Built		
Mission	**Date**	**ET DD250**	**LO2**	**LH2**	**I/T**
STS-91	**06/02/1998**	**96**	**96**	**96**	**96**
STS-95	**10/29/1998**	**98**	**97**	**99**	**98**
STS-88	**12/03/1998**	**97**	**98**	**97**	**97**
STS-96	**05/27/1999**	**100**	**101**	**100**	**100**
STS-93	*07/22/1999*	*99*	*99*	*98*	*99*
STS-103	10/14/1999	101	102	101	101
STS-92	12/02/1999	102	100	102	102
STS-92	02/24/2000	103	103	103	103

Bold = Missions/Tanks flown

Shaded = Planned Missions

Minor Changes

J31188/B02022 - Dual Cover Pass Weld and Extrusion Status

LO2 Dual Cover Pass Implementation and Outer Chord Extrusion Allocation

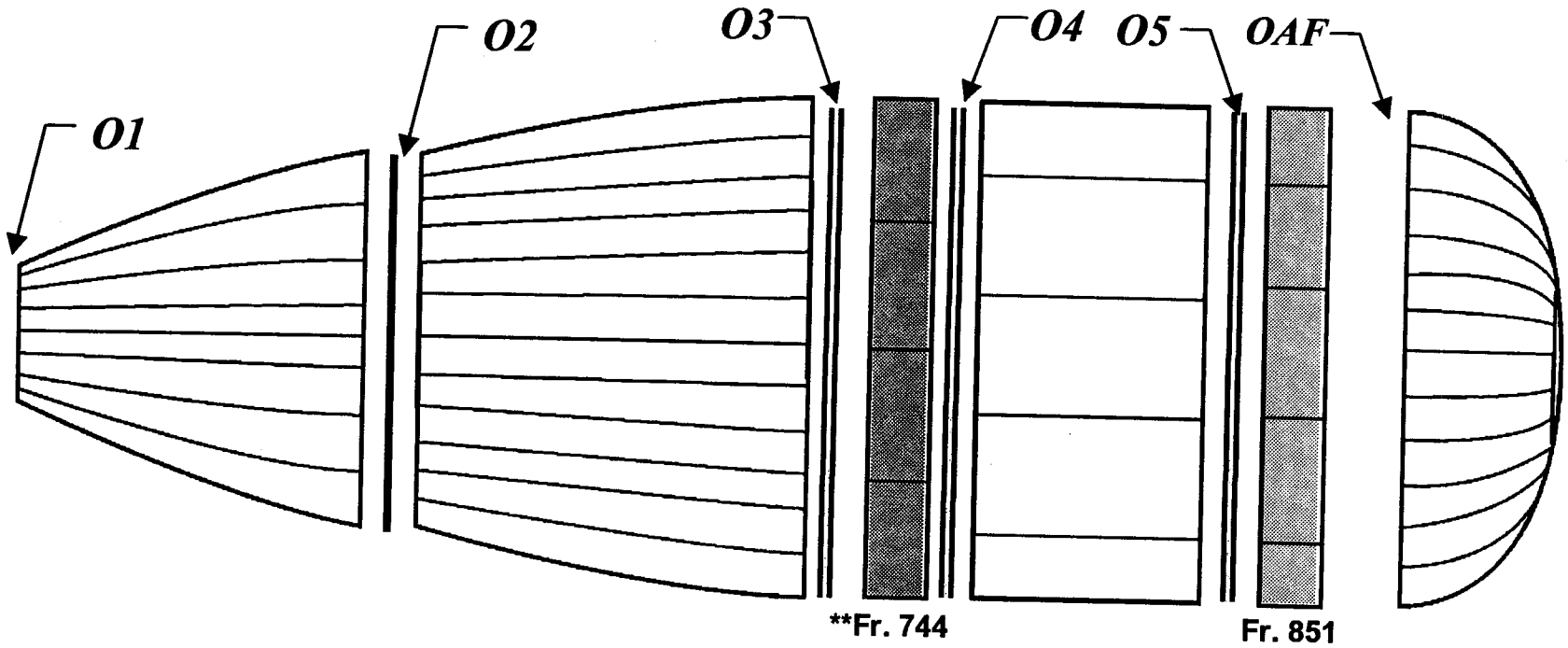

Dual Cover Pass Implementation

Previously Flown
Not Implemented

ET-99 Extrusion Allocation

2195
2219 Class I
2219 Class II

Minor Changes

J31188/B02022 - Dual Cover Pass Weld and Extrusion Status

LH2 Dual Cover Pass Implementation and Outer Chord Extrusion Allocation

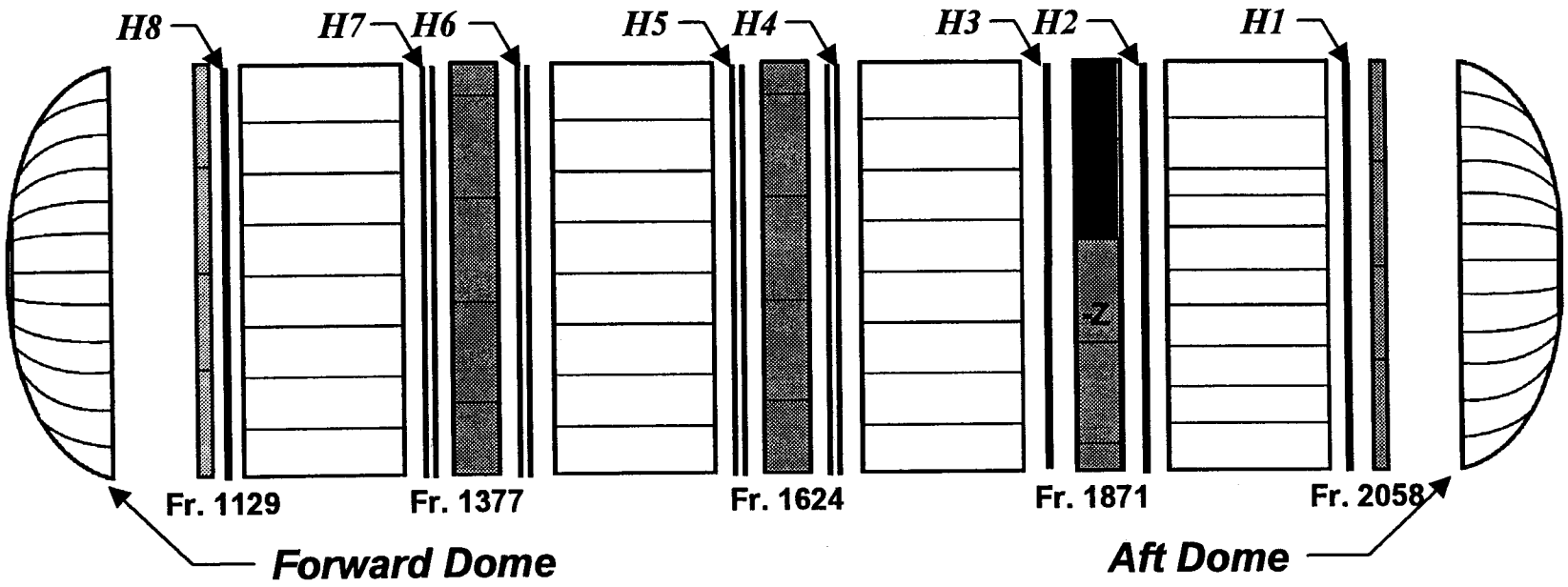

Dual Cover Pass Implementation

- Previously Flown
- Not Implemented

ET-99 Extrusion Allocation

- 2195
- 2219 Class I
- 2219 Class II

Class II or JS/DCN Changes

- All Class I/II JS/DCN changes have been reviewed by MSFC Resident Office
- All Class II STP/STM/Standards changes have been reviewed by MSFC M&P Lab
- These changes are acceptable for flight and summarized in this appendix (presentation not required)
  - Presentation criteria - Selection for presentation based on changes affecting:
    - Processes
    - Configuration
    - Material
    - Alternate Hardware
  - Presentation rejection criteria - All changes that do not affect configuration, material or processes
    - Revise Point of Incorporation
    - Drawing Clarification
    - Non-Flight Hardware Installation/Removal
    - Datum Changes
    - Update Usage/List of Materials (L/M)
    - Drawing Incorporation Errors
    - Manufacturing Aid
    - Drawing Errors
    - Fastener Type/Grip
    - Tolerance Change
    - Productivity
    - Minor changes taken care of by initial release of Class I Change (Same categories as above)

Minor Class II Changes

Change No.	Description
Structural	
H35809-799	On LO2 Feedline Fairing Assembly, changed .73 DIM to .88 on Sheet 8 View BB; added section upper splice and adjacent intercostals to locate row of fasteners through intercostal flange at .73 from edge of splice
Propulsion/ Mechanical	
J31185-001 through -012	Record change only to release Parker Metal Bellows documentation into LMMSS document control system
TPS	
H36809-031	Revised in-process rework requirements to include constraints on PDL repair area and geometry in a horizontal pour situation. Ablator repair altered to include non-closeout areas and revised to clarify serration section in defining correct number of serrations needed for a given repair. Review of tanks through ET-101 showed repair configurations did not exceed new requirements for Hess PDL 1034.

Class Changes - STPs/STMs/STDs/AVL

Change No.	Document	Description
B02030-006	STP1503	Revise to call out STP6014 for closeout adhesive application rather than specific adhesives and requirements
H35809-807	32L10, 32L8	Add silver plated AN818 nuts as an alternate to 57L8 lubricated nuts
H35809-808	25L5	Vendor changed their part number to match LM standard number
H35809-838	34L3	Correct dimension in table--no change to part
H35809-954	45L8	Vendor changed their part number to match LM standard number and correct dimension to match vendor drawing
B02030-005	EQTP1004	Add fingerprint requirements for Castall U-2008 (Never used on ET)
B02033-008	STP5507	Remove allowance for aligned penetrant or visual oxide indications
B02033-009	STP5509	Remove allowance for aligned penetrant or visual oxide indications

Class Changes - STPs/STMs/STDs/AVL

Change No.	Document	Description
B02042-007	2L8014	Release extrusion for friction plug repair (not yet implemented on ET)
B02042-008	2L8015	Release extrusion for friction plug repair (not yet implemented on ET)
B02048-007	STP6515AP1	Update for instrumented thrust panel to same adhesives/requirements as ALTA
B02048-008	STP6520	Call out clean per STP5002 instead of freon PCA for instrumented thrust panel
H36809-095	26L14	Revise standard to reflect vendor dimensions and requirements--no change to hardware
H36809-112	5168	Add code letter for stress relieved die forgings for redesigned vertical strut
H36809-119	STP1005	Remove allowance for hot working of parts and clarify testing and measuring requirements
B02041-800	5108	Add note that -T6 or -T61 tempers will be determined by vendor

Class Changes - STPs/STMs/STDs/AVL

Change No.	Document	Description
B02042-013	43L2-GROUP	Revise the length of the 43L2 friction repair plug by adding .4" to the cylindrical section (Friction repair not implemented yet)
B02050-019	Y912	Limit shelf life of Pasa-gel etchant to one year from date of manufacture
B81478-003	STP5508	Allow 2 SRI heat repairs without MRB action
H36809-093	STP5501	Accept linear X-ray indications in heat repairs of ESR and TSR welds, accept root penetration indications in heat repairs of fillet welds, ands delete allowance of penetration cracks to grade on the back surface of fillet welds
H36809-105	STP4501	Add Lumacolor marking pen code and add laser marking, peen marking, scribing and other metal removing methods
H36809-105	Y1B1	Release code for Lumacolor marking pen
H36809-106	K1B3	Release code for Isopropyl alcohol wiping system
H36809-106	K1B4	Release code for Acetone wiping system
H36809-106	K1B5	Release code for Axarel 4100 wiping system

Class Changes - STPs/STMs/STDs/AVL

Change No.	Document	Description
H36809-106	K1B6	Release code for Isopropyl MEK wiping system
H36809-106	K1B7	Release code for HCFC 225 wiping system
H36809-106	STP5002, STP5013	Add wiping system code numbers to STP
H36809-106	Y1B2	Release code for clean wiping cloth
H36809-113	STP5508	Require cleaning of hardware to be same or greater than certification panels. Delete requirement that heat repairs in seal passes meet Grade 1. Allow use of an approved planishing SRI
H36809-114	STP2013	Permit cotter pins to be cut to desired length
H36809-133	STP1532	Add instructions to require cleaning by sanding and removing net spray surfaces during rework
H36809-147	26L30	Add self locking feature to bolts
H36809-149	M171, M173	Update for obsolete Mil spec revisions and specify solvents for cleaning prior to test

Class Changes - STPs/STMs/STDs/AVL

Change No.	Document	Description
H36809-152	33L24	Revise standard to reflect vendor dimension changes
H36809-156	STP3008	Require cleaning per STP5002 instead of calling out specific materials/instructions
H36809-169	Y440	Update for obsolete Mil Spec call out
H36809-170	Y498	Update for obsolete Mil Spec call out
H36809-203	K1B7	Specify cleaning/certification methods for wipers and delete reusable container
H36809-237	STP1513	Update for spraying BX with NDS equipment for LO2 Aft dome and LH2 Fwd dome

NCD Assessment Criteria

- Assessment of all MRB Items
  - Adequacy of technical dispositions
  - Completeness of required repair/retest
  - First time occurrences/SMR
  - Verification of margin of safety assessment/documented
  - Review of impact to hazards
  - Engineering review for impact to loads
  - Engineering review for reduced extrusion to plate weld allowables

ET-99 DR/PR/OMRSD Waiver/Exceptions

as of 06/17/1999

System	Discrepancy	Problem	MRB Items	Exceptions/ Waivers
• Electrical	0	1	0	0
• Propulsion/ Pneumatics	0	3	0	1
• Structures	2	8	0	0
• Thermal (TPS)	1	14	10	0
Total	3	26	10	1

ET-99 PR/MRBs, Thermal

PR No./Status	Title/Description	Disposition
PET-99-TS-0001 ***CLOSED***	Four foam blisters on aft face of -Y vertical strut	• Blisters removed by sanding • Foam not repaired, MRB use-as-is.
PET-99-TS-0003 ***CLOSED***	PDL underfill on +Y aft fairing at forward periphery	• Discrepant PDL pours and underlying NCFI removed and repaired using PDL
PET-99-TS-0004 ***CLOSED***	PDL underfill on -Y upper aft fairing at bolt location #3.	• Discrepant PDL pours removed and repaired using PDL
PET-99-TS-0006 Page 1 ***CLOSED***	Foam on -Y thrust panel at -Z side of rib #22 sanded below min. dwg. requirements (sanded to 0.25" remaining). Area is 1.15" L x 0.5" W from Xt 963 to Xt 1013.	• Remaining foam adequate for tanking and flight, low foam accepted for use-as-is.

ET-99 PR/MRBs, Thermal

PR No./Status	Title/Description	Disposition
PET-99-TS-0006 Page 1A ***CLOSED***	Small divot on -Y thrust panel foam just forward of EB-1. Divot 1.3" L x 0.5" W with 0.3" foam remaining.	• Divot area was blended to meet aerodynamic waviness and accepted for use as is.
PET-99-TS-0008 ***CLOSED***	SRB foam PR-855 spilled onto LH2 tank NCFI near -Y diagonal strut just above Xt 2058.	• SRB foam PR-855 not considered detrimental to TPS thermal properties and does not pose a debris concern. Use as is.
PET-99-TS-0009 ***CLOSED***	There are several areas of NCFI overspray "whiskers" on the LH2 foam acreage.	• Whiskers result from NCFI spray process and do not degrade TPS performance. ET acceptance dwg will be clarified ET-101and up. ET-99 accepted via MRB use-as-is.

ET-99 PR/MRBs, Thermal

PR No./Status	Title/Description	Disposition
PET-99-TS-0010 ***CLOSED***	1) +Y thrust panel vent holes within 0.15" of fastener ramp termination on rib #3 at Xt 960.	• Foam venting data indicates venting fastener ramps is not detrimental to foam performance. Use as is.
	2) +Y thrust panel vent holes within 0.15" of fastener ramp termination on rib #10 at Xt 893.	• Foam venting data indicates venting fastener ramps is not detrimental to foam performance.Use as is.
	3) -Y thrust panel has area of double vented foam on the +Z side between Xt 887 and Xt 893.	• Foam venting data indicates "double venting" is not detrimental to foam performance. Use as is.

ET-99 PR/MRBs, Thermal

PR No./Status	Title/Description	Disposition
PET-99-TS-0012 Page 1 ***OPEN***	1)Two areas of cracked/crushed foam on the -Y bipod spindle closeout.	• Damaged foam is encapsulated by strut spindle. Shallow crack has no offset. All loose foam removed. Not a debris concern. MRB use as is.
PET-99-TS-0012 Page 1A ***OPEN***	2)Three areas of crushed foam on inboard edge (towards +Z) of +Y bipod spindle closeout.	• Crushed foam areas do not result in debris or icing concerns. MRB use as is.
	3)+Y Spindle foam close-out 0.11" thicker than allowed per drawing.	• Apparent thick foam does not affect thermal or aerodynamic properties. MRB use as is.

ET-99 PR/MRBs, Thermal

PR No./Status	Title/Description	Disposition
PET-99-TS-0013 ***CLOSED***	LO2 umbilical outboard pyro can closeout was overtrimmed exposing purge tube 0.1" more than max allowable.	• Foam overtrim and purge tube exposure do not result in icing concerns. Accepted by BNA per MRB for use as is.
PET-99-TS-0014 ***CLOSED***	Two voids adjacent to LH2 umbilical inboard and outboard pyro can purge tubes.	• Foam overtrim and purge tube exposure do not result in icing concerns. Accepted by BNA per MRB for use as is.

ET-99 KSC Modification Summary/Status

- EMK 153
  - Delete RSS coax connector from GUCP assembly
- FEC KET-0042
  - Installation of Instrumentation on Intertank Thrust Panel
- FEC KET-0043
  - Camera Grid Application on Intertank Thrust Panel
- FEC KET-0045
  - Mechanical Reinforcement of Guide Rail Rub Strips
- FEC KET-0046
  - Intertank Thrust Panel Foam Reduction
- FEC KET-0050
  - Intertank Thrust Panel Foam Venting
- FEC KET-0051
  - Additional Intertank Thrust Panel Foam Venting
- FEC KET-0052
  - Additional Venting of +Y Intertank Thrust Panel Foam

Note: All items previously flown and/or presented

ET-99 Limited Life Components

Cycle Sensitive

Description	Part No.	Serial No.	Limit	Required	Remaining
LH2 Manhole Cover Assy -Fwd	80914081488 -509	0000613530	14	1	14
LO2 Tank Mechanical Assy	80912002000 -500	0000637620	14	1	14
LH2 Tank Mechanical Assy	80914002000 -500	0000606440	14	1	14
LO2 Manhole Cover Assy	80911001205 -509	0000659480	14	1	14

ET-99 Limited Life Components

Cycle Sensitive

Description	Part No.	Serial No.	Limit	Required	Remaining
LO2 Fwd Ogive Cover Plate	80911001207 -509	0000657840	14	1	14
LH2 Manhole Cover Assy -Aft	80911001444 -509	0000643870	14	1	14
LH2 Tank Siphon Closure	80911001445 -502	0000683650	14	1	14

ET-99 Limited Life Components

Age Sensitive

Description	Part No.	Serial No.	Limit	Initiation	Expiration
External Tank	80901000000 -500	00000092	6 Yrs	7/98	7/2004

ET-99 Limited Life Components

Age Sensitive Pyrotechnics - 10 Years Life/Requires Lot Verification Tests After 4 and 7 Years

Description	Part No.	Lot No.	Serial No.	Latest Retest	Expiration
Separator Assy GUCP	PD500020-059	AAH	0001139	02/24/1998	01/2002
Cartridge Assy	PD500020-030	AAH	0001261	02/24/1998	01/2002
Cartridge Assy	PD500020-030	AAH	0001295	02/24/1998	01/2002

ET-99 Alternate Blowing Agent Usage at KSC

Foam	Document	Description	Location	Size
SS-1171	T5141	Aft Hardpoint Closeout	Xt 1973-2076, 180 degrees	4410 sq. in.
PDL-1034	T5249	ET/SRB Aft Fairing Closeout	Xt 2058, 70/290 degrees	240 sq. in.
PDL-1034	T5244	ET/ORB Jack Pad Closeout	Xt 1129, 15/345 degrees	9 sq. in.

STS-93 Facility Modifications

First time use of Hazardous Gas Detection System (HGDS) Flow Splitting Mod on MLP-1

- Previously used on STS-96 (ET-100)
- Provides capability for all three HGDS (Prime, Backup, HUMS) to sample Orbiter aft, Midbody, Payload Bay, LH2 TSM, and ET intertank areas via a common manifold
- Provides increased system redundancy and eliminates single point failure due to loss of sample line or valve

Level II Waivers - Baseline

Document / Requirement	Authority	Paragraph	Waiver No.	Effectivity
NSTS 07700 Vol V – Information Management Requirements				
Generic part name, type, common designation, and part manufacturer H4 code are not required for EEE parts status print out	S00127B 6/28/88	Table C.5 Item 2SR-10	6	ETs 49 & up
Data required in limited life status report is supplied in acceptance data package	S00127B 6/28/88	Table C.6 Item 2SR-7	8	ETs 49 & up
Requirement to deliver element pressure vessel historical data to EPO will remain at contractor facility	S00127B 6/28/88	Table C.6 Item 2SR-7	10	ETs 49 & up

Level II Waivers - Baseline

Document / Requirement	Authority	Paragraph	Waiver No.	Effectivity
NSTS 07700 Vol X – Space Shuttle Flight and Ground System Specification, Book 1 Requirements				
Electrical wiring of redundant systems NSTS 08080-1, 20A/4B	S040732G 6/18/88	Table 2.0	362	ETs 23, 27-29, 31 & up
Soldering, circuit boards, and connectors	S040732M 9/9/88	3.6.15.1.1	379	ETs 23, 27-29, 31 & up
PD7400106 circuit boards	S040732M 9/9/88	3.6.15.2.1	382	ETs 23, 27-29, 31 & up
Pressure transducer circuit boards	S040732M 9/9/88	3.6.15.2.1	383	ETs 23, 27-29, 31 & up

Level II Waivers - Baseline

Document / Requirement	Authority	Paragraph	Waiver No.	Effectivity
NSTS 07700 Vol X – Space Shuttle Flight and Ground System Specification, Book 1 Requirements				
Debris prevention	S082962A 10/2/98	3.2.1.2.14	675	ETs 92, 97-105
NSTS 07700-10-MVP-01– Shuttle Master Verification Plan				
Environmental acceptance of ET components	S002130H 3/7/89	3.7.1	13	ETs 23, 27-29, 31 & up
NSTS 08123 Certification of Flexible Hoses and Bellows				
LH2 feedline bellows	S005203G-R1 8/2/91	1.2	3	ETs 42-45, 47 & up

Level II Waivers - Baseline

Document / Requirement	Authority	Paragraph	Waiver No.	Effectivity
SL-E-0001 – Specification Electromagnetic Compatibility Requirement				
Wire marking is not applicable to the ET	S40732K 9/27/89	3.2.5	3	ETs 23, 27-29, 31 & up
SW-E-0002 – Ground Support Equipment General Design Requirements				
Factor of safety applied to yield for GUCP leg	S87020L 8/17/88	3.4.2.1	21	ETs 23, 27-29, 31 & up

Level III Deviations

Document / Requirement	Paragraph	Waiver No.	Effectivity
CPTO1M09A, External Tank Contract End Item Specification			
• Photographic evidence shows a loss of foam from both +Y and –Y Intertank Thrust Panels • Analysis concluded a low probability of debris impact on Orbiter critical area	3.2.5	233	ETs 92, 97-99, 101-105